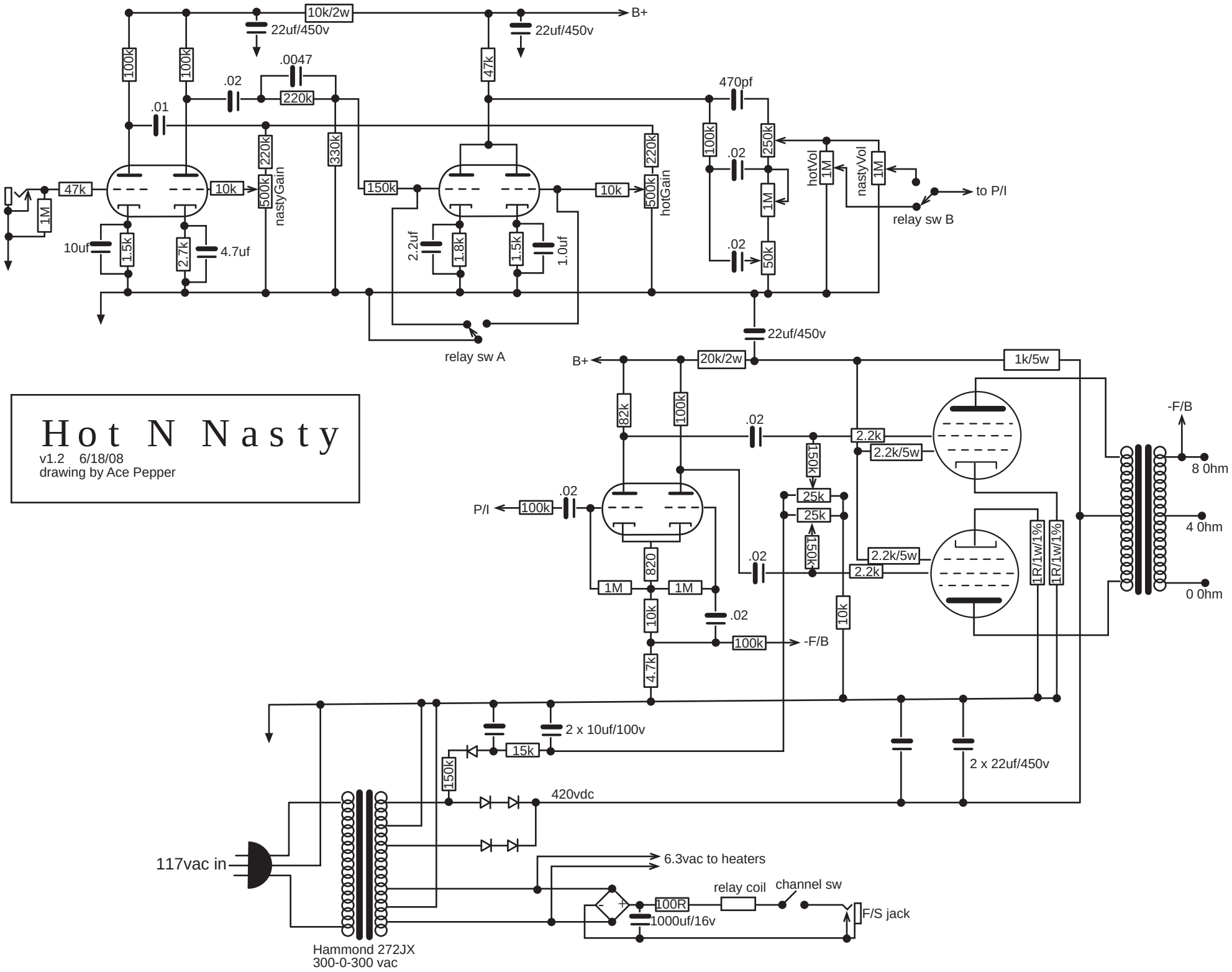
Hot N Nasty
v1.2 6/18/08
drawing by Ace Pepper
B+
10k/2w
22uf/450v
22uf/450v
100k
100k
.0047
.02
220k
.01
47k
470pf
100k
250k
.02
1M
.02
50k
hotVol
1M
nastyVol
1M
to P/I
relay sw B
47k
10k
500k
nastyGain
330k
150k
220k
10k
500k
hotGain
1M
10uf
1.5k
2.7k
4.7uf
2.2uf
1.8k
1.5k
1.0uf
relay sw A
22uf/450v
B+
20k/2w
1k/5w
82k
100k
.02
2.2k
2.2k/5w
150k
25k
25k
150k
P/I
100k
.02
820
1M
1M
.02
2.2k/5w
2.2k
10k
.02
100k
-F/B
10k
4.7k
1R/1w/1%
1R/1w/1%
-F/B
8 0hm
4 0hm
0 0hm
2 x 10uf/100v
15k
150k
420vdc
2 x 22uf/450v
117vac in
6.3vac to heaters
relay coil
channel sw
100R
1000uf/16v
F/S jack
Hammond 272JX
300-0-300 vac