Ace Pepper Custom Amps

1987/Plexi50 v2.4
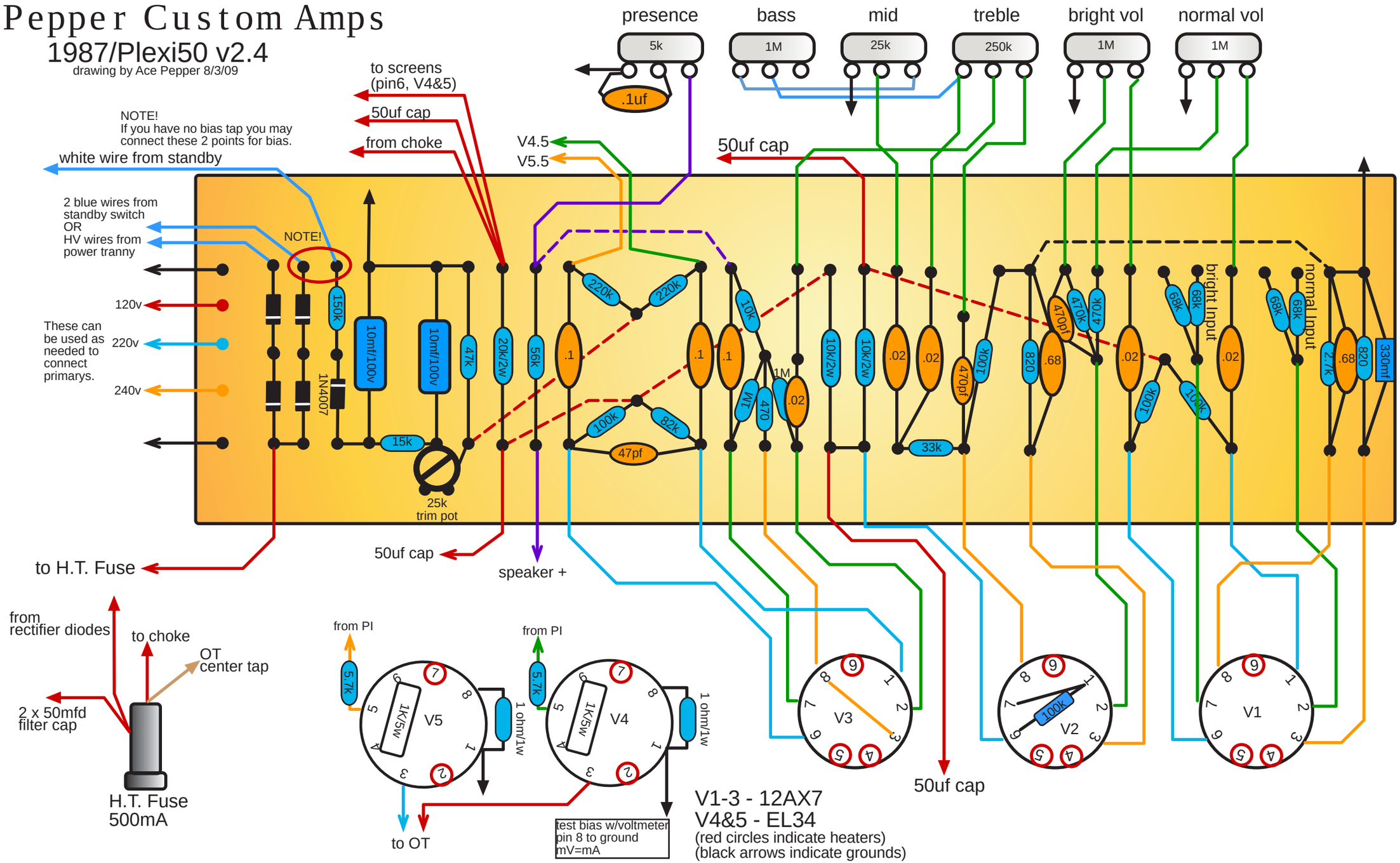
drawing by Ace Pepper 8/3/09